Air Operated Stainless Steel 2 Way Ball Valve

Type: PC2100E/ PC2110E/ PC2120E

Available with actuator function: DOUBLE ACTING , SINGLE ACTING (Failsafe), MODULATING (with optional positioner)

Type: 2100E

Pneumatic actuator direct mounted

Type: 2110E

Actuator fitted via mounting kit

Awaiting image

Type: 2120E

Actuator fitted via TSM stem extension

Pneumatic Actuator features:

Rack and pinion construction

Hard anodised extruded aluminium body

Epoxy coated cast aluminium end caps

Pre-tensioned spring sets, no special tools needed to change

Low friction sliding parts

Factory lubricated for life (high temperate grease available)

ATEX approved for use in Zone 1 EExd applications

Local visual position indicator

ISO5211, VDI-VDE3845 & Namur compliant

Applications:

Water, oil, air and many corrosive media, subject to compatibility with wetted parts in contact with media. Can be used for drinking water but not WRAS approved in the UK for use on potable water.

Valve actuators sized on a maximum differential pressure of 10 bar wet service, operated at least once per day. If the intended duty differs from these parameters, or is dry (air or gas), please call to check actuator sizing as a larger output valve actuator may be required.

Maximum working temperature of a direct mounted assembly is +80C, the temperature limit for the pneumatic actuator using standard grease. A factory option of high temperature grease is available.

For higher working temperatures, consider models that have a mounting kit or TSM stem extension between the valve and the pneumatic valve actuator which uses air cooling to dissipate the rising heat from the ball valve away from the actuator.

Ball valve information:

Full bore 3 piece construction, providing full unrestricted flow and a very low pressure drop across the valve. Designed for automation with integrally cast ISO5211 actuator mounting platform. Turning the ball through 90° fully opens the valve, turning back through 90° fully closes the valve and isolates the flow. End connections are threaded BSP female, with NPT, socket weld and butt weld options.

Specifications:	
Actuator housing	Hard anodised aluminium
Hazardous area rating	ATEX II 2GD EExd
Actuator temp limits	-20 to +80°C
Assembly temp limits	PC-2100E +80°C Direct mounted
	PC-2110E +120°C Via mounting kit
	PC-2120E +100°C
Valve body	CF8M (Cast 316SS)
Valve ball	316SS
Valve seats	RPTFE
Valve pressure rating	UTI 2” 64 bar at ambient temp
Valve temp limits	-50 to +215°C
Size range	1/4” to 4”

How this air operated 1/4 turn valve works (on-off):

Within the cylindrical bore of the actuator are 2 opposing aluminium pistons, each with an integrally cast rack, which is driven by a bearing supported nickel plated steel pinion.

The housing has air ports drilled to allow compressed air supplied via the air connection ports to flow either in to the cavity between the pistons to drive them apart, which via the rack & pinion system, rotates the actuator’s output drive shaft, or into the cylinder between the pistons and end caps to drive the pistons together, which reverses the direction of rotation of the output shaft. Final open and closed positions are set with adjustable mechanical stops.

Actuator body coating options:

Standard: Hard anodized extruded aluminium body, with epoxy coated aluminium end caps.

ENP: Electroless nickel plated body and end caps

Teflon®: PTFE coated aluminium body & end caps

Epoxy: Epoxy coated aluminium body & end caps to your colour

Actuator Information - air ports and standard direction of rotation (closes clockwise)

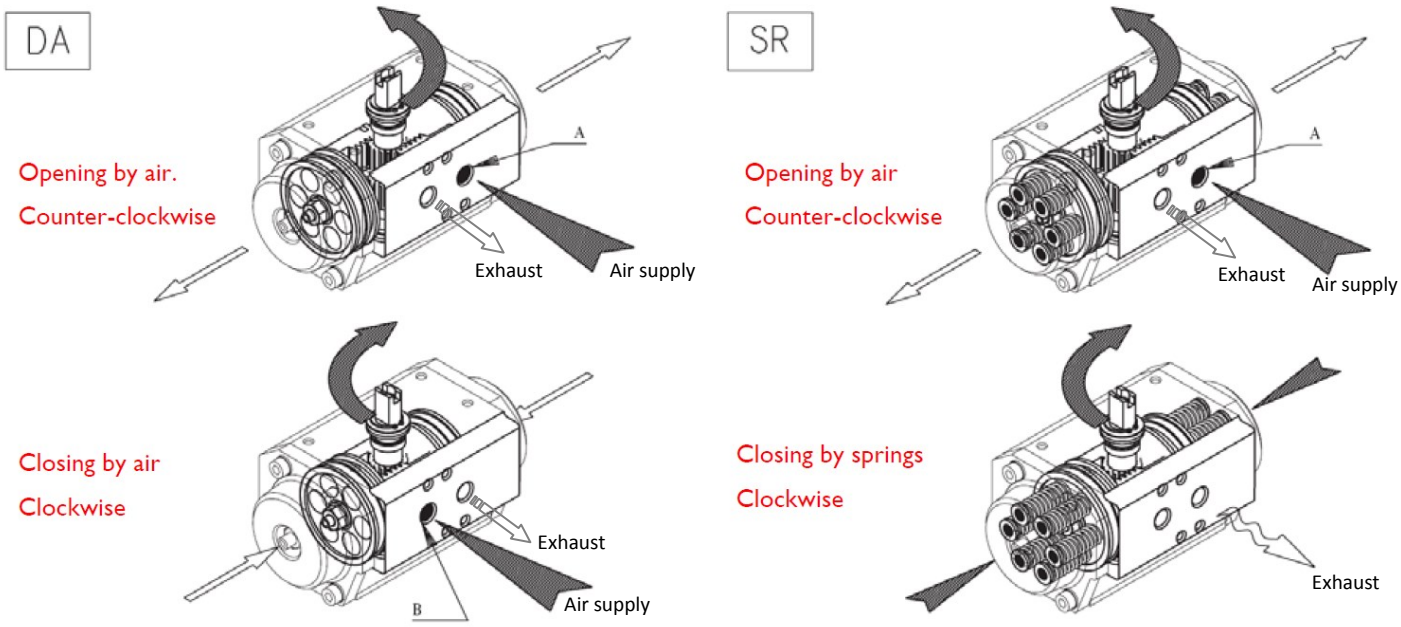

Double acting actuators - standard shaft rotation

Single acting actuators - standard shaft rotation

Actuator Information - standards for mounting valves and accessories

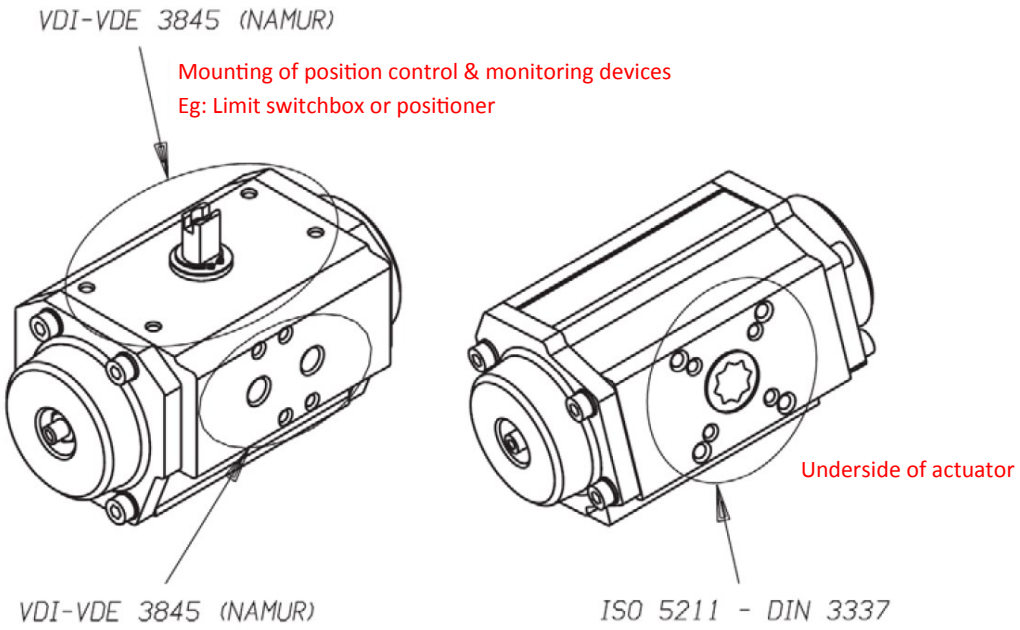

Mounting of Namur pilot solenoid valves

Valve mounting

Air Operated Stainless Steel 2 Way Ball Valve

Type: PC2100E/ PC2110E/ PC2120E

Method of assembly and accessories for position feedback, position monitoring and position control

Safety Notice:

Ensure positioner, switchbox and/ or solenoid are compatible with the intended installation area - is it a safe area, or a hazardous area? If hazardous, which Zone? We can supply either. Call to check if unsure.

Positioner: Sets the degree of opening of the actuator (and therefore valve) proportional to a control input signal. This signal can be either 4-20mA, or 0-15psi.

Switchbox: Internal switches, activated by cams or similar, driven by the actuator's pinion, make a circuit at end of travel (ie: full open, or full closed) to provide remote end of travel confirmation. Also has local visual position indicator

Solenoid: Provides electrical control of the pneumatic actuator. Air remains energised permanently, the solenoid valve switches to control the opening and closing of the actuator.

E-P Positioner mounted

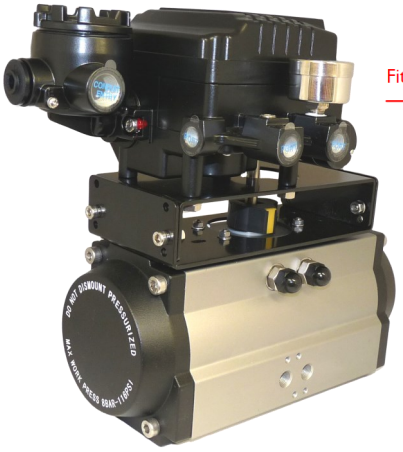

Fit limit switchbox or positioner

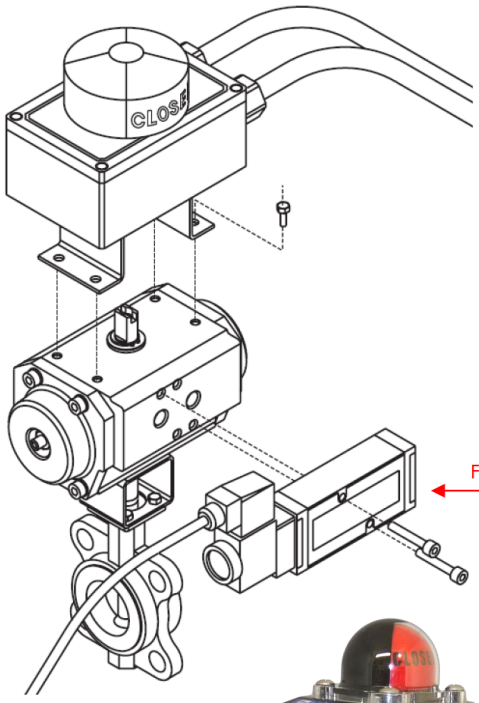

Fit Namur pilot solenoid

Exd –Zone 1 hazardous area pilot solenoid and switchbox fitted. On request the solenoid can be pre-wired to the switch-box.

Safe area switchbox fitted

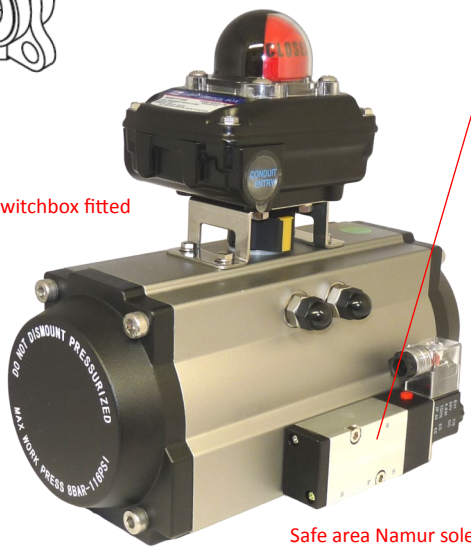

Safe area Namur solenoid fitted.

Uncontrolled copy, not subject to automatic updates.

Air Operated Stainless Steel 2 Way Ball Valve

Type: PC2100E/ PC2110E/ PC2120E

Valve Data 1

SPECIFICATIONS	
1	Material SS 316 CF8M
2	Threaded ends according to DIN 2999
3	Max working pressure 63 BAR (See PxT chart below)
4	Max Temperature -25°C to + 180°C
5	Full bore
6	Bi-directional flow
7	R PTFE seats & PTFE seals, + Viton O ring stem seal
8	Belville washer securing stem nut protected by lock washer
9	Direct mount ISO5211 patent 9900474 respected

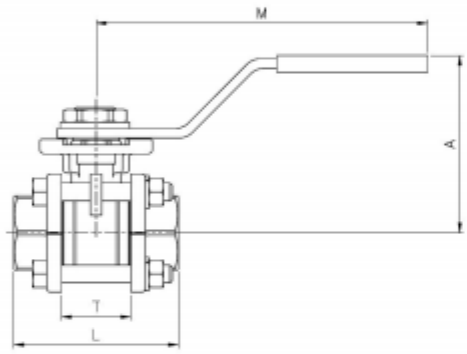

DIMENSIONS							
REF	SIZE mm	A mm	L mm	M mm	ISO5211 / stem	Torque Nm *	Wt Kg
2025 02	1/4"	60	47.6	112	F03 x 9	4	0.39
2025 03	3/8"	60	47.6	112	F03 x 9	4	0.38
2025 04	1/2"	60	56.0	112	F03/04 x 9	4	0.44
2025 05	3/4"	70	73.0	138	F04/05 x11	8	0.82
2025 06	1"	70	82.0	138	F04/05 x 11	10	1.02
2025 07	11/4"	88	91.0	160	F05/07 x14	14	1.79
2025 08	11/2"	94	104	205	F05/07 x14	20	2.46
2025 09	2"	100	120	205	F05/07 x 14	30	3.47
2025 10	21/2"	150	155	330	F07/10 x 17	36	8.50
2025 11	3"	165	182	330	F07/10 x 17	60	12.40
2025 12	4"	175	220	340	F07/10 x 17	95	19.65

* Torque is without safety.

PRESSURE/ TEMPERATURE CHART

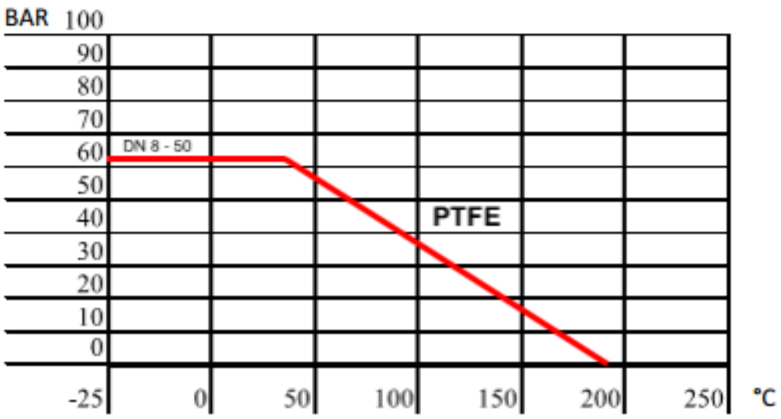

Uncontrolled copy, not subject to automatic updates.

Assembly Dimensions

Type: PC-2100E Air actuator direct mounted to 3 piece full bore stainless steel ball valve

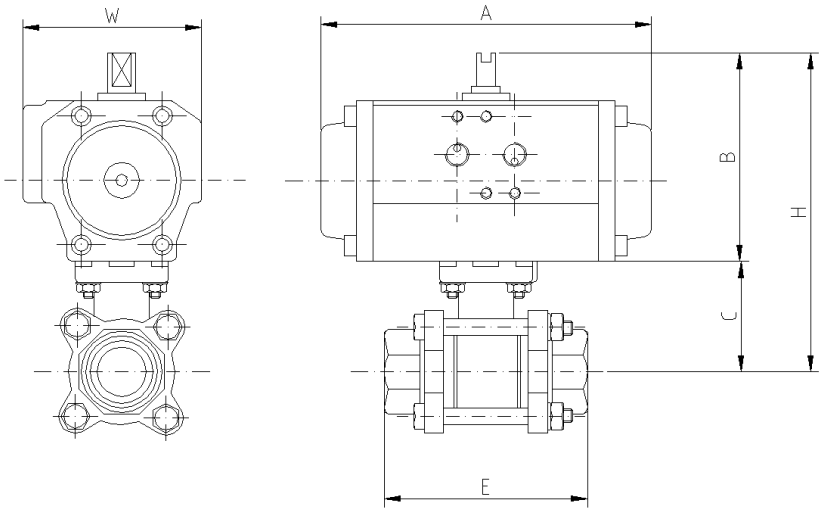

Typical Dimensions:

Double acting actuated stainless steel ball valve with pneumatic actuator direct mounted to the valve PC-2101E									
	Model	A	B	C	E	H	W	Kilos	Kv
1/4”									6.8
3/8”									6.8
1/2”									12.8
3/4”									29.1
1”									47.8
11/4”									72.6
11/2”									106.8
2”									213.7
21/2”									273.3
3”									495.3
4”									871.1
Spring return actuated stainless steel ball valve with pneumatic actuator direct mounted to the valve PC-2102E									
1/4”									6.8
3/8”									6.8
1/2”									12.8
3/4”									29.1
1”									47.8
11/4”									72.6
11/2”									106.8
2”									213.7
21/2”									273.3
3”									495.3
4”									871.1

Awaiting data, call for details

Awaiting data, call for details

Kv = m^3 per hour with a 1 bar pressure drop across the valve

CV = US gallons per hour with a 1psi pressure drop across the valve

Cv = Kv / 0.86

Assembly Dimensions

Type: PC-2110E Air actuator fitted via mounting kit to 2 way 3 piece stainless steel ball valve

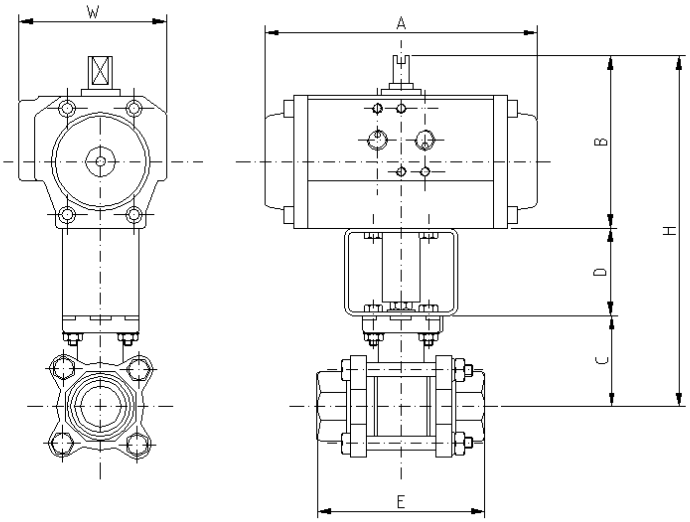

Typical Dimensions:

Double acting stainless ball valve with pneumatic actuator mounted to the valve via a mounting kit PC-2111E										
	Model	A	B	C	D	E	H	W	Kilos	Kv
1/4”										6.8
3/8”										6.8
1/2”										12.8
3/4”										29.1
1”										47.8
11/4”										72.6
11/2”										106.8
2”										213.7
21/2”										273.3
3”										495.3
4”										871.1
Spring return stainless ball valve with pneumatic actuator mounted to the valve via a mounting kit PC-2112E										
1/4”										6.8
3/8”										6.8
1/2”										12.8
3/4”										29.1
1”										47.8
11/4”										72.6
11/2”										106.8
2”										213.7
21/2”										273.3
3”										495.3
4”										871.1

Awaiting data, call for details

Kv = m^3 per hour with a 1 bar pressure drop across the valve

CV = US gallons per hour with a 1psi pressure drop across the valve

Cv = Kv / 0.86

Uncontrolled copy, not subject to automatic updates.

Assembly Dimensions

Type: PC-2120E Air actuator mounted to stainless steel ball valve via stainless steel stem extension (TSM)

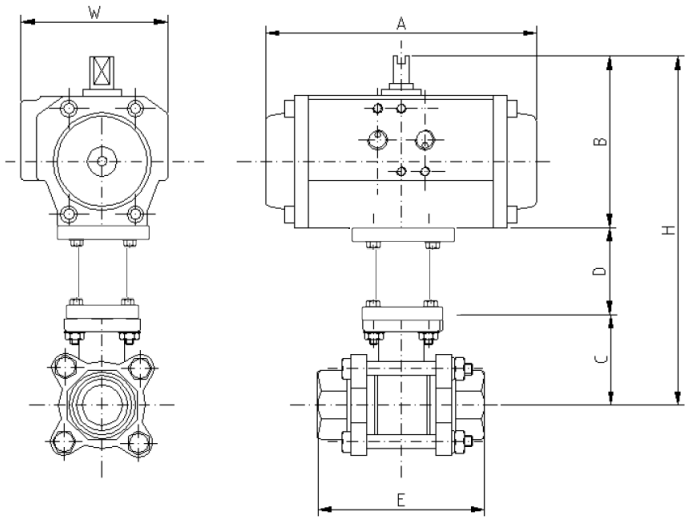

Typical Dimensions:

Double acting stainless ball valve with pneumatic actuator mounted to the valve via a TSM PC-2121E										
	Model	A	B	C	D	E	H	W	Kilos	Kv
1/4”										6.8
3/8”										6.8
1/2”										12.8
3/4”										29.1
1”										47.8
11/4”										72.6
11/2”										106.8
2”										213.7
21/2”										273.3
3”										495.3
4”										871.1
Spring return stainless ball valve with pneumatic actuator mounted to the valve via a TSM PC-2122E										
1/4”										6.8
3/8”										6.8
1/2”										12.8
3/4”										29.1
1”										47.8
11/4”										72.6
11/2”										106.8
2”										213.7
21/2”										273.3
3”										495.3
4”										871.1

Awaiting data, call for details

Kv = m^3 per hour with a 1 bar pressure drop across the valve

CV = US gallons per hour with a 1psi pressure drop across the valve

Cv = Kv / 0.86

Uncontrolled copy, not subject to automatic updates.