530in.lbs Smart Electric Valve Actuator

Modulating Function Type: J3C Model: S55DPS

Available with actuator function: POWER OPEN - POWER CLOSE | FAILSAFE | MODULATING | FAILSAFE MODULATING

Feature rich multi-voltage smart electric actuator with LED status light and function conversion kits.

J3C-S55

Overview

The J3C-S55 multi-voltage electric valve actuator offers an impressive list of standard features that include protection against damage from over-torque or condensation, safety features, the ability to have it's standard on-off function changed with user friendly plug & play conversion kits, and a highly visible multi-colour LED light to offer users continual actuator operational status feedback.

The J3C S Series failsafe electric actuator is created by installing easy to fit user friendly 'BSR' failsafe function conversion kit. The J3C BSR failsafe actuator can be set to fail open or fail closed.

The J3C S Series modulating electric actuator is created by installing the plug and play 'DPS' modulating function conversion kit. The J3C DPS modulating actuator can be controlled by either a 4-20mA or 0-10V control signal and provides feedback as standard.

The multi-colour LED light remains constantly lit if the actuator is able to respond to remote commands - if it can't, it flashes. The sequence of the flashes indicates what the reason may be for it being unable to respond.

J3C-S55 Electric Actuator Specifications

Voltage range - automatic sensing	24V - 220V AC (1ph) or DC
Modulating control (DPS pre-installed)	4-20mA or 0-10VDC
Operating time (0-90° no load)	15 seconds
Maximum break torque	530 lb. Ins (60Nm)
Maximum operating torque (run/ reseat)	486 lb. Ins (55Nm)
Duty rating	75%
IP Rating (IEC 60529)	IP67
Working angle Standard (on request)	90° (180° or 270° options)
Mounting ISO:5211 x DIN 3337	F05 & F07 x 17 (standard) 11 or 14mm drive output (Option)
Motor switches	2 x SPDT micro switches
End of travel confirmation (volt free)	2 x SPDT micro switches
Heater	3.5 W
Ambient temperature range	-4 to +158°F (-20° to +70°C)
Electrical connecting plugs	EN175301-803
Weight	5.3lbs (2.4 kg)

J3C-S55 Consumption

Figures	See last page
Motor	24VC 1ph, Class B, S4 service

J3C-S Main features

- IP67 Weatherproof, UV protected, corrosion resistant plastic housing.
- LED light gives user continuous visual actuator status feedback - if the LED is flashing, there's a problem!
- Many protective features as standard - such as over-torque and anti-condensation.
- Multi-voltage capable, automatically sensed
- Very user friendly and easy to install - all the electrical connections are external.
- Digital Positioning System (DPS) pre-installed to give proportional control from typically 4-20mA or 0-10VDC I/O signal.
- Failsafe modulating available (+BSR)

How this J3C-S Modulating electric 1/4 turn valve actuator works

With power permanently connected, movement of the J3CS actuator is then proportional to an input control signal, typically 4-20mA or 0-10V, usually the output from a process controller. The DPS processor continually compares the physical position of the J3CS output shaft to the input signal, and if a difference exists, controls the motor to eliminate the difference. Output shaft position is very accurate using digital magnetic position sensing technology. An output signal is provided as standard.

530in.lbs Smart Electric Valve Actuator

Modulating Function Type: J3C Model: S55DPS

Available with actuator function: POWER OPEN - POWER CLOSE | FAILSAFE | MODULATING | FAILSAFE MODULATING

Main features of the J3C electric actuator

IP67 Weatherproof, UV protected, corrosion resistant Polyamide housing.	IP67 allows the J3C electric actuator to be submerged, the international standard IEC60529 states: *Test duration is 30 minutes. Ingress of water in harmful quantity shall not be possible when the enclosure is immersed in water under defined conditions of pressure and time (up to 1 m of submersion). The lowest point of enclosures with a height less than 850 mm is located 1000 mm below the surface of the water, the highest point of enclosures with a height equal to or greater than 850 mm is located 150 mm below the surface of the water.* The J3C is therefore fully weatherproof.
Multi-colour LED light gives user continuous visual actuator status feedback - if the LED is flashing, there's a problem!	The LED light provides a continuous highly visible indication of the J3C electric actuator's operational status. If all is well, the LED is solidly lit. If it is blinking there is a problem and the J3C will not respond to remote commands - the sequence gives an indication of the likely cause.
Many protective features as standard - such as over-torque and anti-condensation.	Over-torque protection is electronic, the J3C constantly measures the current being drawn and compares it with pre-set parameters, if the current draw exceeds the parameter, the power is cut preventing mechanical damage to the actuator. An internal thermostatic heater, energised from the external power supplied to the power DIN connector, ensures the J3C's internal temperature remains above that at which condensation could form.
Multi-voltage capable, automatically sensed	The J3C valve actuator automatically senses the external power being applied and can accept any external voltage between 24V and 220V AC or DC . Note: Patent pending
Very user friendly and easy to install - all electrical connections are external.	J3C-S55 mounting options are ISO5211 F05 or F07 with a 174mm female star drive, with 11mm or 14mm options. Electrical connections are made using external DIN plugs supplied with the J3C actuator eliminating the need to remove the actuators cover to connect.
Unique plug & play function conversion kits create **FAILSAFE** & **MODULATING** function from a standard on-off electric actuator.	Uniquely, the J3C electric actuator can have it's standard on-off functionality changed by the installing of very user friendly plug and play function conversion kits. See the following page for more details
Manufactured in the EU	The J3C electric valve actuators are designed and manufactured by in the EU. The innovative maker as been designing and manufacturing electric actuators for over 25 years and these valve actuators are sold in more than 70 countries.

In the interest of product improvement, specifications may change without notice.

530in.lbs Smart Electric Valve Actuator

Modulating Function Type: J3C Model: S55DPS

Available with actuator function: POWER OPEN - POWER CLOSE | FAILSAFE | MODULATING | FAILSAFE MODULATING

WIRING DIAGRAM

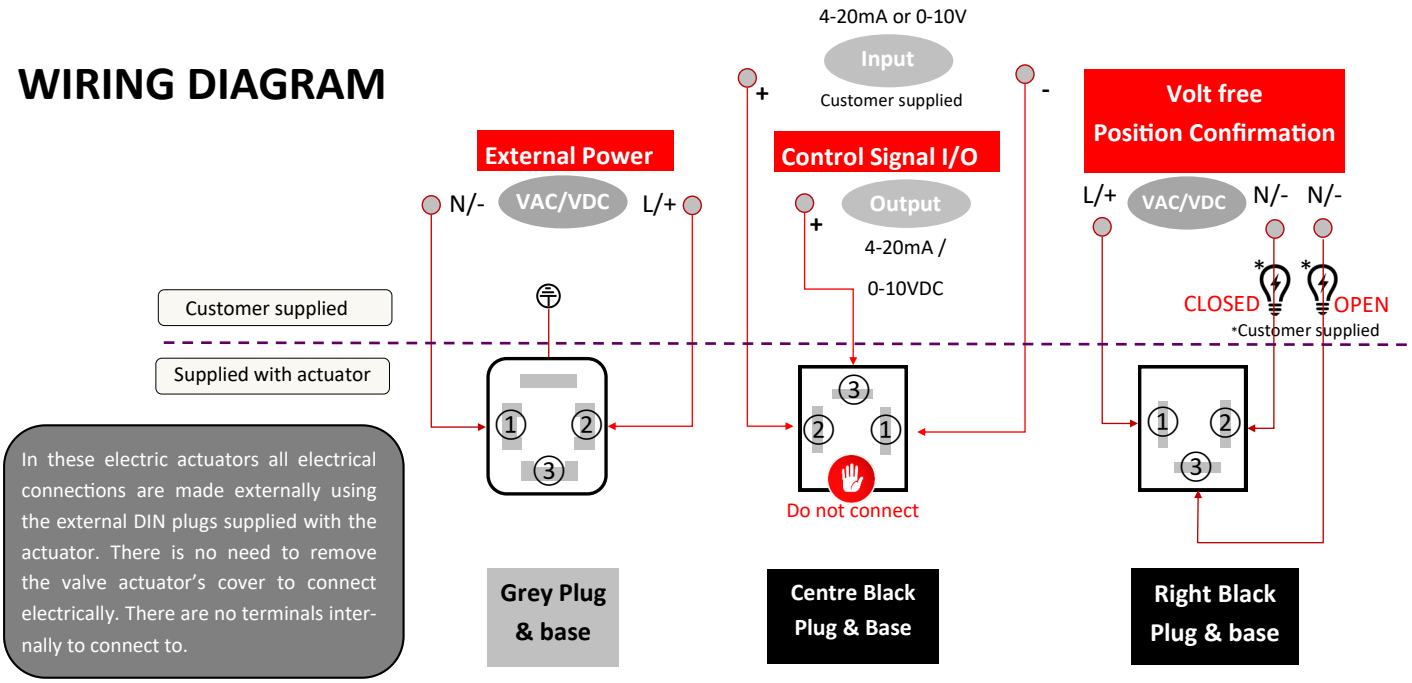

J3C-S MODULATING ELECTRIC ACTUATOR

The J3CS Modulating is used where the position of the actuator is required to be set by a control input signal. Unlike an on-off electric actuator, a modulating actuator will rarely travel from open to closed in one movement, it may only be required to alter its position by a few degrees. This is achieved by installing our DPS (Digital Positioning System) - in stalled by AVS when ordered as a modulating electric actuator.

How this electric 1/4 turn valve works (Modulating):

Power permanently connected, movement of the J3CS actuator is then proportional to an input signal, typically 4-20mA or 0-10V. The DPS processor continually compares the physical position of the J3CS output shaft to the input signal, and if a difference exists, controls the motor to eliminate the difference. An output signal is provided as standard. The reaction from the J3CS actuator to a loss of control signal can be set as below, but it will stay put on loss of external power.

Configuration options:

1) Closes on loss of control signal

2) Opens on loss of control signal

3) Stays put on loss of control signal (Fail Freeze)

The DPS in the J3CS uses the latest magnetic position sensing technology which, when combined with digital processing, produces very accurate modulating control. This is a very Smart Red Box.

Option:

It is possible to change the J3CS actuator's function by installing user friendly pug and play function conversion kits. This will provide the following alternative function:

Failsafe Modulating J3CS Actuator

Adding the BSR (Battery 'Spring Return') plug and play function conversion kit to the J3CS modulating actuator, it becomes a J3CS failsafe modulating electric actuator.

The advantage this gives is that the actuator will fail to either the open or closed position, depending on how the DPS positioner is configured, in the event of an external power failure.

The BSR failsafe system comprises of an industrial rechargeable NiCad battery and a PCB containing a trickle charger and control circuitry. It can either be installed by AVS on original supply, or retro-fitted.

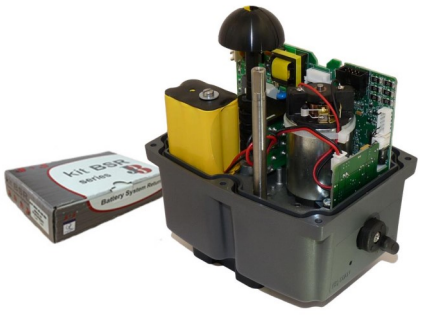

BSR Failsafe plug & play kit can be added to create failsafe modulating function.

In the interest of product improvement, specifications may change without notice.

530in.lbs Smart Electric Valve Actuator

Modulating Function Type: J3C Model: S55DPS

Available with actuator function: POWER OPEN - POWER CLOSE | FAILSAFE | MODULATING | FAILSAFE MODULATING

J3C-S55 Dimensions

ISO5211 Mounting	F05	F07
Mounting PCD (mm)	50	70
Drive Standard)	17mm	
Drive (Optional)	4mm or 14mm	

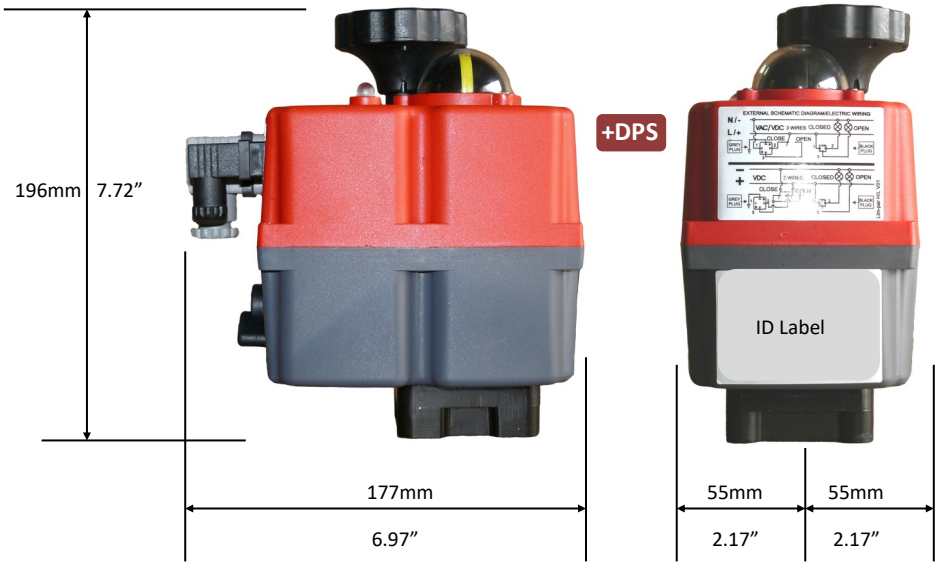

J3C S55 Materials of construction:	
Housing	Anti-corrosive Polyamide
Fasteners	Stainless steel
Gears	Polyamide (speed reducing) & steel (load bearing)
Shaft	Stainless steel
Output drive	Zamac
Position indicator	Clear Polyamide

J3C Optional Plug & Play Function Conversion Kits:

Failsafe and/or modulating function is quick and easy to achieve in the J3C smart electric actuator by the fitting of the user friendly failsafe and/or modulating plug & play function conversion kits to the standard on-off J3C smart valve actuator.

The J3C S Series **failsafe electric actuator** is created by installing easy to fit user friendly **Battery ‘Spring Return’ (BSR)** failsafe function conversion kit. The J3C BSR failsafe actuator can be set to fail open or fail closed.

The BSR uses an internal trickle charged industrial rechargeable battery to provide an alternate power source to drive the J3CS failsafe actuator to its pre-set ‘safe’ position if external power is lost.

The J3C S Series **modulating electric actuator** is created by installing the plug and play **Digital Positioning System (DPS)** modulating function conversion kit. The J3C DPS modulating actuator can be controlled by either a 4-20mA or 0-10V control signal and provides feedback as standard.

The DPS provides accurate proportional control utilizing the latest digital magnetic position sensing technology and covers the popular I/O control signals of 4-20mA and 0-10VDC. The DPS is self-calibrating.

When actuated valves are ordered with failsafe, modulating or failsafe modulating function, J+J pre-install and test the plug and play function conversion kits. They can however easily be retro-fitted to J3C smart electric actuators should the on-off function requirement, supplied as standard, change.

Fitting both plug and plug function conversion kits quickly and easily creates failsafe modulating functionality to J3CS electric actuators.

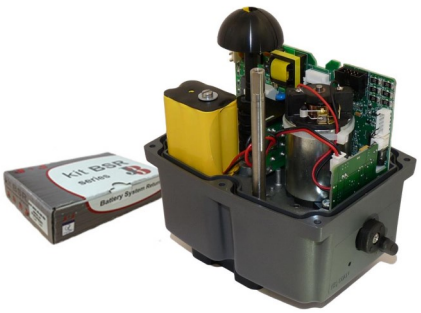

BSR plug & play kit for J3C creates a FAILSAFE ELECTRIC ACTUATOR

DPS plug & play kit for J3C creates a MODULATING ELECTRIC ACTAUTOR

In the interest of product improvement, specifications may change without notice.

530in.lbs Smart Electric Valve Actuator

Modulating Function Type: J3C Model: S55DPS

Available with actuator function: POWER OPEN - POWER CLOSE | FAILSAFE | MODULATING | FAILSAFE MODULATING

Consumption

Supply Voltage	No load		At maximum operational torque 55Nm		At maximum break torque 60Nm	
	Amps	Watts	Amps	Watts	Amps	Watts
24V DC	0.33	8.00	1.21	29.00	1.25	30.0
48V DC	0.18	8.40	0.56	27.0	0.59	28.30
110V DC	0.06	6.10	0.17	18.20	0.18	19.60
24V AC	0.47	11.20	1.69	40.70	1.73	41.60
48V AC	0.29	14.20	0.97	46.50	1.01	48.30
110V AC	0.12	13.60	0.36	39.20	0.37	40.70
240V AC	0.09	21.10	0.20	47.50	0.20	48.00

Note: To allow for inrush, and motor wear, MULTIPLY maximum consumption by 3 for sizing power supplies.

Multi-colour LED status light:

Actuator operational status	LED Colour
No power being supplied	Off
Power being supplied to actuator	Fully OPEN = Solid Fully CLOSED = Solid
Actuator moving between open and closed	Open to close = flash Close to open = flash
Actuator in MANUAL mode	Flash
Torque limiter activated	If closing when activated = flash if opening = flash
BSR failsafe system activated (for max 3 mins)	If configured Fail Close = flash if Fail Open = flash
BSR Battery needs charging warning	Flash
Actuator with DPS(2015) positioner	Opening = flash Closing = flash Stationary =

BSR Failsafe System Specifications:

Detail	J3C-S55
Initial charge time BEFORE being placed into operational service	28 Hours
Maximum movements with fully charged battery	5
Minimum recharge time after each movement	10 mins
Battery consumption when power drawn from battery	6.2W
Nominal battery capacity	1000mA
Current drawn when operating by battery	3.3mA
Charge consumption	36mA/h
System to change between fail close & fail open	PCB jumper

DPS2015 Digital Positioner Specifications:

Detail	J3C-S Series
Input/ Output options	0-10V, 1-10V, 0-20mA, 4-20mA
Output shaft feedback system	Magnetic, digital
Accuracy, linearity, hysteresis, repeatability	Better than 1%

In the interest of product improvement, specifications may change without notice.