Air Operated Stainless V-Ball Control Ball Valve

Type: PA2700V/ PA2710V/ PA2720V

Available with actuator function: DOUBLE ACTING , SINGLE ACTING (Failsafe), MODULATING (with optional positioner)

Type: 2700V

Pneumatic actuator direct mounted

Type: 2710V

Actuator fitted via mounting kit

Type: 2720V

Actuator fitted via TSM stem extension

Pneumatic Actuator features:

Rack and pinion construction

Hard anodised extruded aluminium body

Epoxy coated cast aluminium end caps

Pre-tensioned spring sets, no special tools needed to change

Low friction sliding parts

Factory lubricated for life (high temperate grease available)

ATEX approved for use in Zone 1 EExd applications

Local visual position indicator

ISO5211, VDI-VDE3845 & Namur compliant

Applications:

Water, oil, air and many corrosive media, subject to compatibility with wetted parts in contact with media.

These ball valves are designed as a control ball valve with an optional electro-pneumatic or pneumatic positioner controlling the degree of opening or closing. The V notch provides far superior control of flow when compared to a standard bored ball. The V notch angle can be 30°, 60° or 90°, see flow chart to aid V angle selection.

Valve actuators sized on a maximum differential pressure of 10 bar wet service, operated at least once per day. If the intended duty differs from these parameters, or is dry (air or gas), please call to check actuator sizing as a larger output valve actuator may be required.

Maximum working temperature of a direct mounted assembly is +80C, the temperature limit for the pneumatic actuator using standard grease. A factory option of high temperature grease is available.

Ball valve information:

Full bore 3 piece construction, providing full unrestricted flow and a very low pressure drop across the valve. Designed for automation with integrally cast ISO5211 actuator mounting platform. Turning the ball through 90° fully opens the valve, turning back through 90° fully closes the valve and isolates the flow. End connections are threaded BSP female, with NPT, socket weld and butt weld options

Specifications:	
Actuator housing	Hard anodised aluminium
Hazardous area rating	ATEX II 2GD EExd
Actuator temp limits	-20 to +80°C
Assembly temp limits	PA2700V +80°C Direct mounted
	PA2710V +120°C Mounted via kit
	PA2720V +100°C Via extension
Valve body	CF8M (Cast 316SS)
Valve ball	316SS
Valve seats	SS Filled PTFE
Valve pressure rating	UTI 1” 2000psi at ambient temp 11/4” - 2” 1500 psi 21/2” - 4” 1000 psi
Valve temp limits	-50 to +215°C
Size range	1/2” to 4”

How this air operated 1/4 turn valve works (on-off):

Within the cylindrical bore of the actuator are 2 opposing aluminium pistons, each with an integrally cast rack, which is driven by a bearing supported nickel plated steel pinion.

The housing has air ports drilled to allow compressed air supplied via the air connection ports to flow either in to the cavity between the pistons to drive them apart, which via the rack & pinion system, rotates the actuator’s output drive shaft, or into the cylinder between the pistons and end caps to drive the pistons together, which reverses the direction of rotation of the output shaft. Final open and closed positions are set with adjustable mechanical stops.

Actuator body coating options:

Standard: Hard anodized extruded aluminium body, with epoxy coated aluminium end caps.

ENP: Electroless nickel plated body and end caps

Teflon®: PTFE coated aluminium body & end caps

Actuator Information - air ports and standard direction of rotation (closes clockwise)

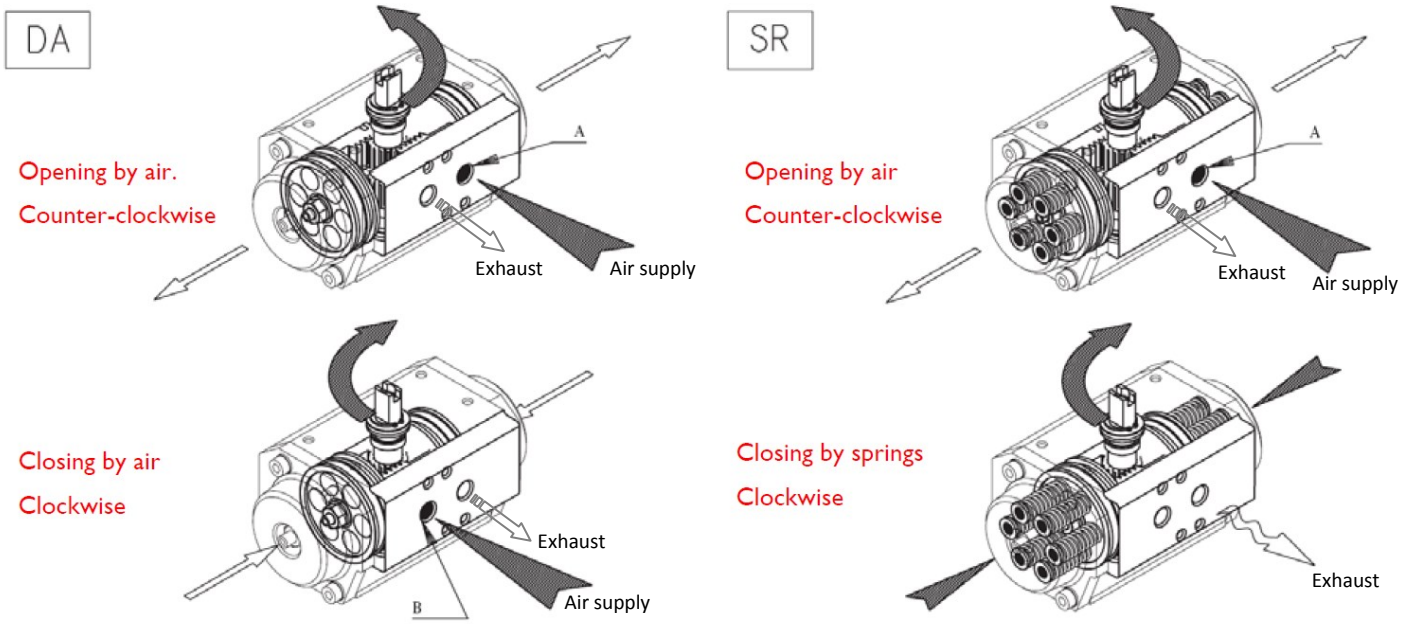

Double acting actuators - standard shaft rotation

Single acting actuators - standard shaft rotation

Actuator Information - standards for mounting valves and accessories

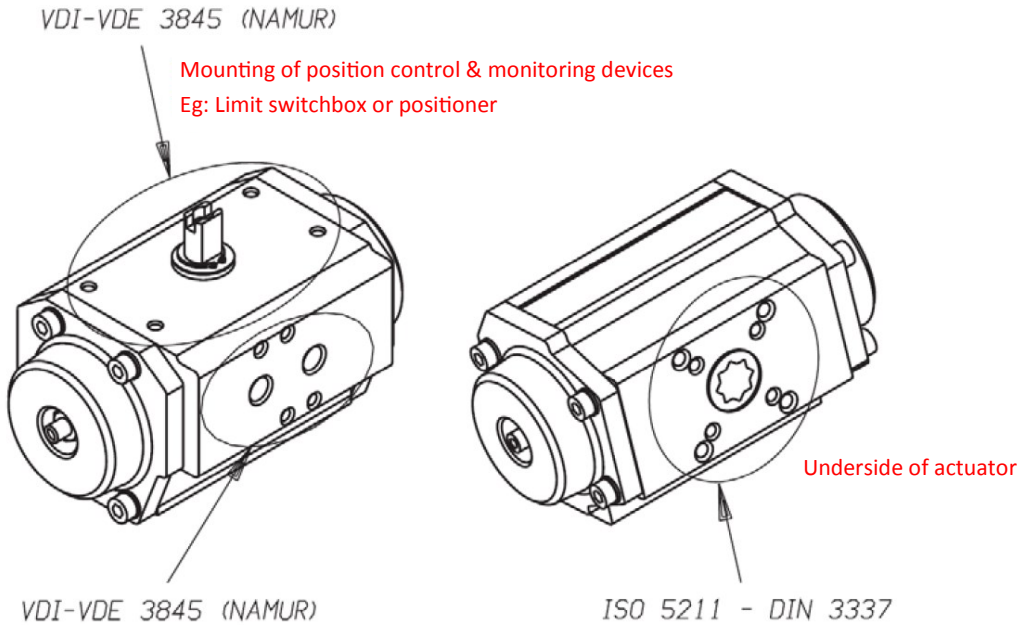

Mounting of Namur pilot solenoid valves

Valve mounting

Method of assembly and accessories for position feedback, position monitoring and position control

Safety Notice:

Ensure positioner, switchbox and/ or solenoid are compatible with the intended installation area - is it a safe area, or a hazardous area? If hazardous, which Zone? We can supply either. Call to check if unsure.

Positioner: Sets the degree of opening of the actuator (and therefore valve) proportional to a control input signal. This signal can be either 4-20mA, or 0-15psi.

Switchbox: Internal switches, activated by cams or similar, driven by the actuator's pinion, make a circuit at end of travel (ie: full open, or full closed) to provide remote end of travel confirmation. Also has local visual position indicator

Solenoid: Provides electrical control of the pneumatic actuator. Air remains energised permanently, the solenoid valve switches to control the opening and closing of the actuator.

Fit limit switchbox or positioner

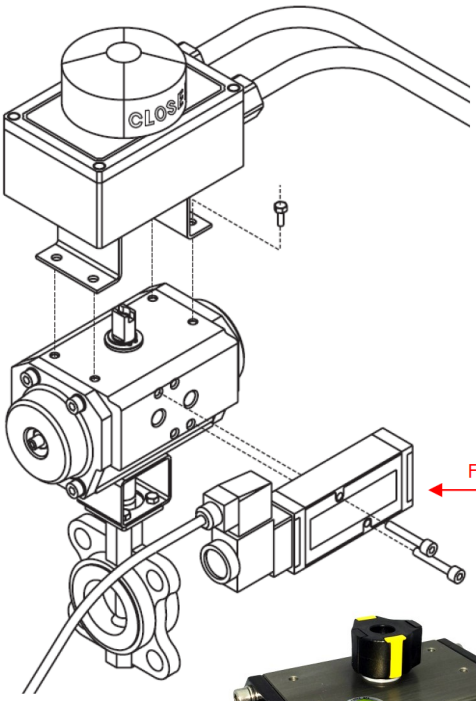

Fit Namur pilot solenoid

Safe area Namur solenoid fitted.

Sample image showing V Control ball valve fitted with spring return pneumatic actuator and electro-pneumatic positioner.

Showing V notch ball , and SS filled ball seats

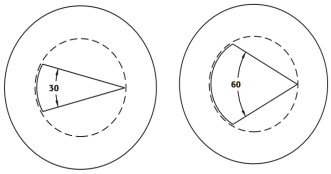

30 V-Port

60 V-Port

Valve Data 1

P-2700 Pneumatic Valve

MARS™

We Make Automation Easy

SERIES 88V

DIRECT MOUNT
HIGH PERFORMANCE
3-PIECE HEAVY DUTY BALL VALVES

DIRECT MOUNTING OF ACTUATOR TO VALVES

SPECIFICATIONS

Construction : 3-piece Body, Full Bore or Reduced Bore
Size : 1/2" to 4" with 30, 60 or 90° V Ball

Ends : Screwed, Socket Weld, Butt Weld
Body : CF8M, WCB / DIN 1.4408, 1.0619
Ball & Stem : 316 S.S.
Seats : Reinforced Teflon
Rating : 1/4" ~ 1" 2000 P.S.I.
1 1/4" ~ 2" 1500 P.S.I.
2 1/2" ~ 4" 1000 P.S.I.
Temperature : -60° F ~ 420° F (R-PTFE)

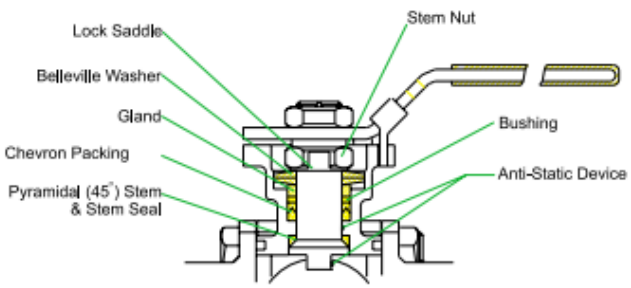

Germany Patent No. 299 02 532.2
United States Patent No. 5,954,088
China Patent No. ZL 98 2 09161.3

MAINTENANCE FREE LIVE LOADED
DOUBLE SEALING HIGH CYCLE STEM SYSTEM

STANDARDS

ANSI/ASME : B16.34 , B16.25 , B1.20.1
API : 6D , 607 , 598
ISO : 5211, 5209 , 5752 , 7/1 , 261
DIN : 3357 , 50.049-3.1B
MSS: SP25 , SP72
BS : 5351 , 6755-1 , 6755-2

DESIGN ADVANTAGES

- PATENTED ISO 5211 DIRECT MOUNT PAD
  Allows direct mounting of pneumatic and electric actuators, no brackets and couplings needed, easy and low cost for automated service.
- EXTRA HIGH CYCLE LIFE
  Mars maintenance free live loaded double sealing high cycle stem packing system provides extra longer service life.
- BLOW OUT PROOF STEM
- 3-PIECE SWING OUT DESIGN
- ANTI-STATIC DEVICE
  Standard applied between stem and body,stem and ball
- ALL STAINLESS STEEL WELD ENDS IN 316L
  Reduces inter-granular corrosion in welding
- FULLY ENCAPSULATED BODY SEALS
  Allows welding in line without disassembly
- WIDE RANGE OF SEAT AND SEAL MATERIALS AVAILABLE

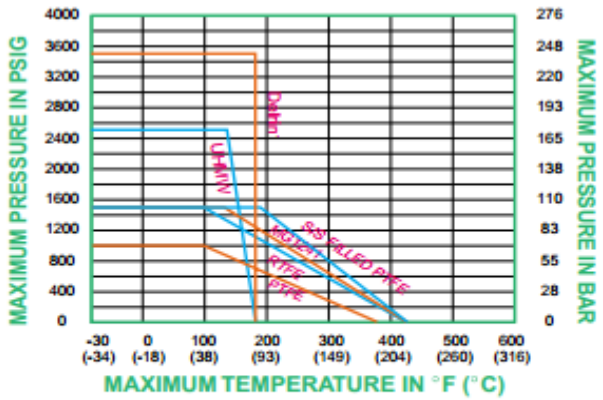

SEAT RATING CHART
These ratings are based on the seats only. please also refer to the valve body rating to be sure all the valve limitations meet your application.

Air Operated Stainless V-Ball Control Ball Valve

Type: PA2700V/ PA2710V/ PA2720V

Valve Data 2

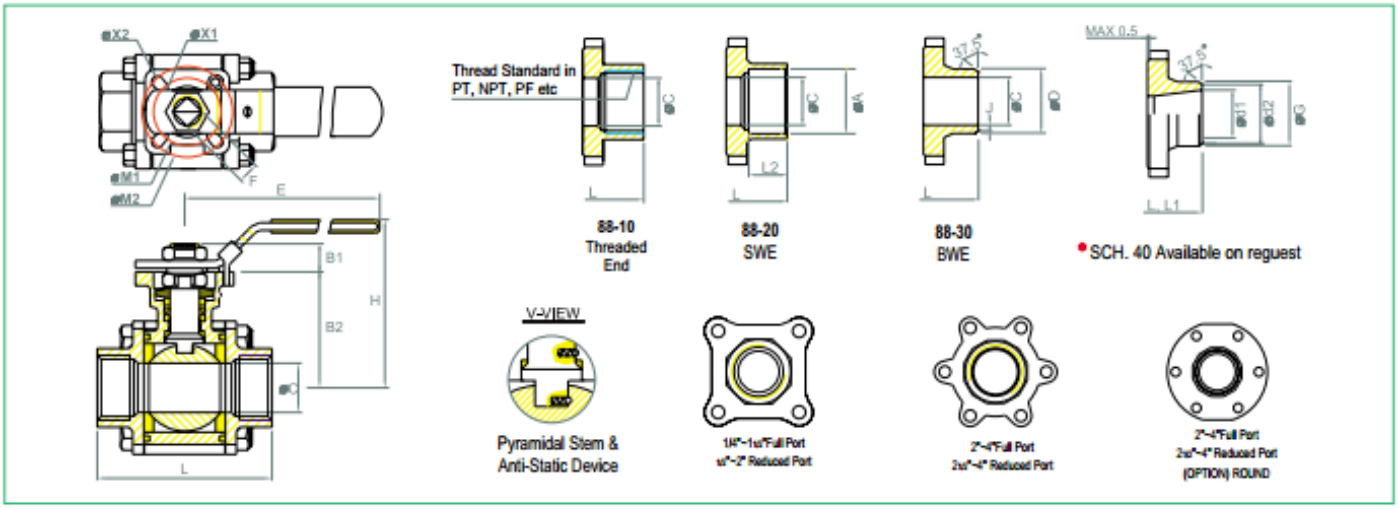

DIMENSIONS (mm)

H, B1 DIMENSIONS ± mm

SIZE	⌀A		B1		B2		⌀C		⌀D		⌀d1		⌀d2		E		F		⌀G		H		J		L		L1		L2		⌀M1		⌀M2		⌀X1		⌀X2		P		ISO5211		Wt.(Kg)	
	F	R	F	R	F	R	F	R	F	R	F	R	F	R	F	R	F	R	F	R	F	R	F	R	F	R	F	R	F	R	F	R	F	R	F	R	F	R	F	R	F	R		
1/4"	14.0	/	8.1	/	42.6	/	11.5	/	14.0	/	9.24	/	11.8	/	139	/	9.0	/	14.0	/	78.3	/	1.75	/	72.5	/		/	10	/	36	/	42	/	6	/	6	/	3	/	F03 & F04	/	0.89	/
3/8"	17.6	/	8.1	/	42.6	/	12.6	/	17.5	/	12.53	/	13.6	/	139	/	9.0	/	17.5	/	78.3	/	1.75	/	72.5	/		/	10	/	36	/	42	/	6	/	6	/	3	/	F03 & F04	/	0.88	/
1/2"	21.7	21.7	8.1	8.1	42.6	42.6	15.0	12.6	21.6	21.7	15.76	/	18.0	/	139	139	9.0	9.0	21.7	21.7	78.3	78.3	1.6	1.75	72.5	72.5		/	10	10	36	36	42	42	6	6	6	6	3	3	F03 & F04	F03 & F04	0.82	0.88
3/4"	27.3	27.3	9.6	8.1	46.9	42.6	20.0	15.0	27.2	27.2	20.96	20.96	24.0	24.0	139	139	9.0	9.0	27.2	27.2	82.6	78.3	1.6	1.6	85.4	72.5		75	13	13	36	36	42	42	6	6	6	6	3	3	F03 & F04	F03 & F04	1.29	0.82
1"	34.1	34.1	11.4	9.6	59.3	46.85	25.0	20.0	34	34	26.64	26.64	30.5	30.5	165	139	11.0	9.0	34.0	34.0	98.5	82.6	1.6	1.6	105.3	85.4		89.8	13	13	42	36	50	42	6	6	7	6	5	3	F04 & F05	F03 & F04	2.01	1.29
1 1/4"	42.8	42.8	11.4	11.4	62.6	59.3	32.0	25.0	42.8	42.7	35.08	35.08	39.0	39.0	165	165	11.0	11.0	42.7	42.7	101.8	98.5	1.6	1.6	111	105.3		109.4	13	13	42	42	50	50	6	6	7	7	5	5	F04 & F05	F04 & F05	2.76	2.01
1 1/2"	48.7	48.7	11.4	11.4	79.0	62.6	38.0	32.0	48.6	48.6	40.49	40.49	45.0	45.0	215	165	14.0	11.0	48.6	48.6	127	101.8	1.6	1.6	127.3	111		114.4	13	13	50	42	70	50	7.5	6	9	7	10	5	F05 & F07	F04 & F05	4.21	2.76
2"	61.0	61	14.1	14.1	87.7	79.0	50.0	38.0	60.5	60.5	52.51	52.51	56.5	56.5	215	215	14.0	14.0	60.5	60.5	135.6	127	1.6	1.6	142.8 145	127.3		130	16	16	50	50	70	70	7.5	7.5	9	9	10	10	F05 & F07	F05 & F07	5.83 6.88	4.21
2 1/2"	[illegible]	77	16.8	14.1	108.7	87.7	65.0	50.0	76.3	76.1		65.7		70.7	262	215	17/19	14.0	76.3	76.1	167.7	135.6			185	145		145	16	16	70	50	102	70	10	7.5	12	9	16	10	F07 & F10	F05 & F07	12	6.88
3"	90	90	17.8	16.8	117.7	108.7	80.0	65.0	90	90					262	262	17/19	17/19	90.0	90.0	176.7	167.7			205	185			16	16	70	70	102	102	10	10	12	12	16	16	F07 & F10	F07 & F10	16.2	12
4"	115.2	115.2	16.8	17.8	133.7	117.7	100.0	80.0	116	116					312	262	17/19	17/19	116.0	116.0	192.7	176.7			240	205			20	20	70	70	102	102	10	10	12	12	16	16	F07 & F10	F07 & F10	25.8	16.2

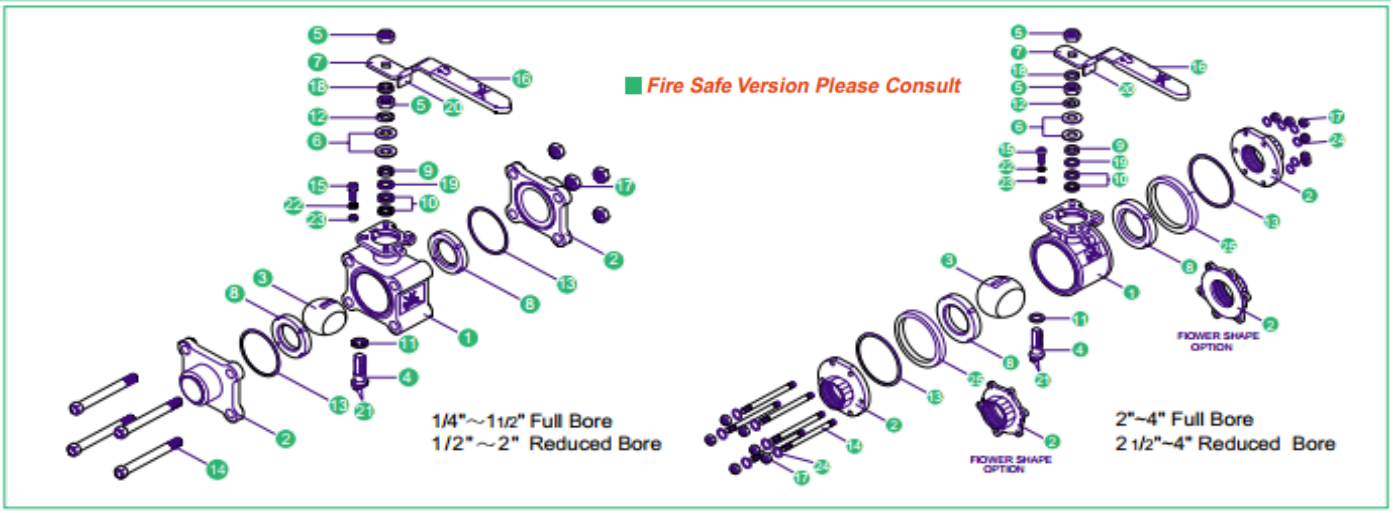

No.	Part	Material	Q'ty	No.	Part	Material	Q'ty
1	Body	ASTM A351 Gr. CF8M/ASTM A216 Gr. WCB	1	13	Body Gasket	PTFE	2
2	End Cap	ASTM A351 Gr. CF8M/ASTM A216 Gr. WCB	# 2	14	Bolt	SUS 304	*
3	Ball	SUS 316	1	15	Stop Bolt	SUS 304	1
4	Stem	SUS 316	1	16	Handle Sleeve	Vinyl	1
5	Stem Nut	SUS 304	2	17	Bolt Nut	SUS 304	&
6	Belleville Washer	SUS 301	2	18	Stem Washer	SUS 304	1
7	Handle	SUS 304	1	19	Bushing	25% Glass Fiber Filled + PTFE	1
8	Ball Seat	Reinforced PTFE	2	20	Locking Device	SUS 304	1
9	Gland	SUS 304	1	21	Anti-Static Device	SUS 304	2
10	V-Ring Packing	MG1241	@	22	Stop Nut Washer	SUS 304	1
11	Stem Seal	Reinforced PTFE	1	23	Stop Nut	SUS 304	1
12	Lock Saddle	SUS304	1	24	Bolt WASHER	SUS304	12
				25	Seat Gasket	RPTFE	2

All stainless Steel Weld Ends in 316L * Full Bore 1/4"~1 1/2" : 4 pcs 2"~4" : 6pcs Reduced Bore 1/2"~2":4pcs 2 1/2"~4":6pcs

& For 1/4"~1 1/2"-4PCS, 2"~4"-12PCS(Full port) .,1/2"~2"-4PCS, 2 1/2"~4"-12PCS(Reduced port @For 1/4"~2"-2 pcs, 2 1/2"~4"-3pcs

Valve Data 2

"V" Series Flow Coefficients- Cv Chart

Valve Size	Ball Angle	0%	15%	20%	30%	40%	50%	60%	70%	80%	90%	100%
1/2"	30	0	0.1	0.1	0.2	0.3	0.5	0.8	1.1	1.6	2.2	2.6
	60	0	0.1	0.1	0.3	0.5	0.9	1.4	2	3.3	4.4	6
	90	0	0.1	0.2	0.4	0.6	0.9	1.5	2.2	3.8	5.4	6.9
3/4"	30	0	0.1	0.2	0.5	0.7	1.1	1.8	2.4	3.3	4.5	5.4
	60	0	0.1	0.2	0.7	1	1.7	2.8	4	6.5	9	12
	90	0	0.2	0.4	0.8	1.2	2	3.1	4.6	8	11.3	14
1"	30	0	0.1	0.3	0.8	1.3	2.3	3.5	5.1	9.8	8.5	10
	60	0	0.2	0.4	1.1	1.8	3.4	5.3	7.9	12.3	15.3	21
	90	0	0.2	0.6	1.8	3.4	5.1	8.1	11.4	16	21	29
1 1/4"	30	0	0.2	0.4	1.1	2	3.7	5.5	8	10	13	15
	60	0	0.2	0.6	1.8	3	5.5	9.5	12.8	19	26	39
	90	0	0.3	0.8	2	5	8	14	19	28	39	55
1 1/2"	30	0	0.3	0.6	1.6	3	5	7.5	11	14	17	20
	60	0	0.4	0.8	2.5	4	8	13	19	27	40	52
	90	0	0.4	0.9	3.5	7	13	20	31	42	63	78
2"	**30**	**0**	**0.4**	**1.2**	**3.8**	**6**	**10**	**15**	**23**	**31**	**43**	**60**
	60	0	0.4	1.5	4.6	9	16.5	27	39	55	83	110
	90	0	0.5	2	6	12	22	35	45	70	105	135
2 1/2"	30	0	0.4	1	4	8	12	18	28	37	62	75
	60	0	0.4	1.5	5	10	21	34	53	75	103	150
	90	0	0.5	1.7	7	14	28	48	70	106	160	218
3"	30	0	0.5	1.2	4	8	14	23	33	46	65	82
	60	0	0.5	2.5	6	14	25	40	65	91	128	165
	90	0	0.7	3.5	8	18	35	60	90	135	205	310
4"	30	0	0.6	2	6	15	29	48	71	100	130	159
	60	**0**	**0.7**	**3**	**11**	**25**	**40**	**59**	**90**	**141**	**212**	**356**
	90	0	1	3.5	16	40	75	125	190	295	442	670

Pressure vs. Temperature

NOTE: Dotted line shows the rating for valve body. Solid line shows the rating for valve seat. Both ratings need to be consulted when determining the limitation of the valve for specific application.

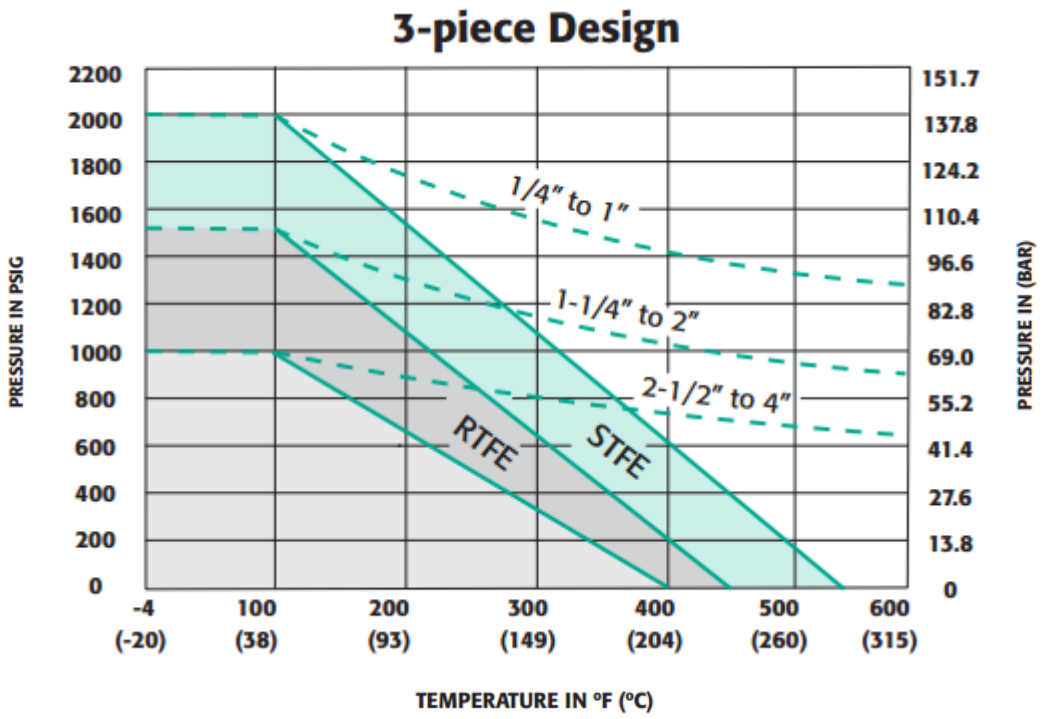

Assembly Dimensions

Type: 2700V Air actuator direct mounted to 3 piece reduced bore stainless steel Mars V control ball valve

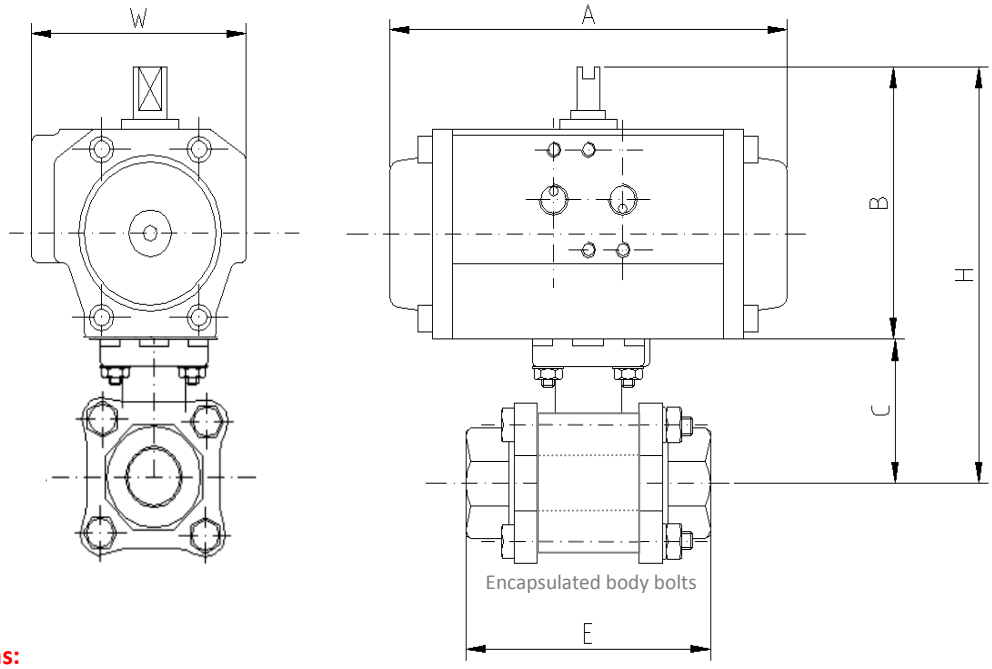

Typical Dimensions:

Double acting actuated Mars stainless steel V control ball valve with pneumatic actuator direct mounted to the valve P-2701V									
	Model	A	B	C	E	H	W	Kilos	Kv
1/2”	CH042	160	77	42.6	72.5	119	61	1.7	See chart for flows
3/4”	CH042	160	77	42.6	72.5	125	61	1.7	
1”	CH050	138	87	46.9	85.4	144	75	2.4	
11/4”	CH063	156	103	59.3	105.3	164	86	3.6	
11/2”	CH075	210	120	62.6	111.0	198	94	6.1	
2”	CH075	210	120	79.0	127.3	205	94	7.5	
21/2”	CH075	210	120	87.7	145.0	229	94	12.0	
3”	CH100	281	145	108.7	185.0	263	120	18.2	
4”	CH100	281	145	117.7	205.0	278	120	27.4	
Spring return actuated Mars stainless steel V control ball valve with pneumatic actuator direct mounted to the valve P-2702V									
1/2”	CH050SR	138	87	42.6	72.5	129	75	1.9	See chart for flows
3/4”	CH063SR	156	103	42.6	72.5	151	86	2.8	
1”	CH063SR	156	103	46.9	85.4	160	86	4.4	
11/4”	CH075SR	210	120	59.3	105.3	181	94	5.3	
11/2”	CH085SR	228	130	62.6	111.0	208	104	7.9	
2”	CH085SR	228	130	79.0	127.3	215	104	9.4	
21/2”	CH100SR	281	145	87.7	145.0	254	120	15.9	
3”	CH115SR	310	172	108.7	185.0	290	134	22.6	
4”	CH125SR	362	185	117.7	205.0	318	141	35.9	

Kv = m^3 per hour with a 1 bar pressure drop across the valve
CV = US gallons per hour with a 1psi pressure drop across the valve
Cv = Kv / 0.86

Assembly Dimensions

Type: 2710V Air actuator fitted via mounting kit to Mars fire-safe stainless steel V control reduced bore ball valve

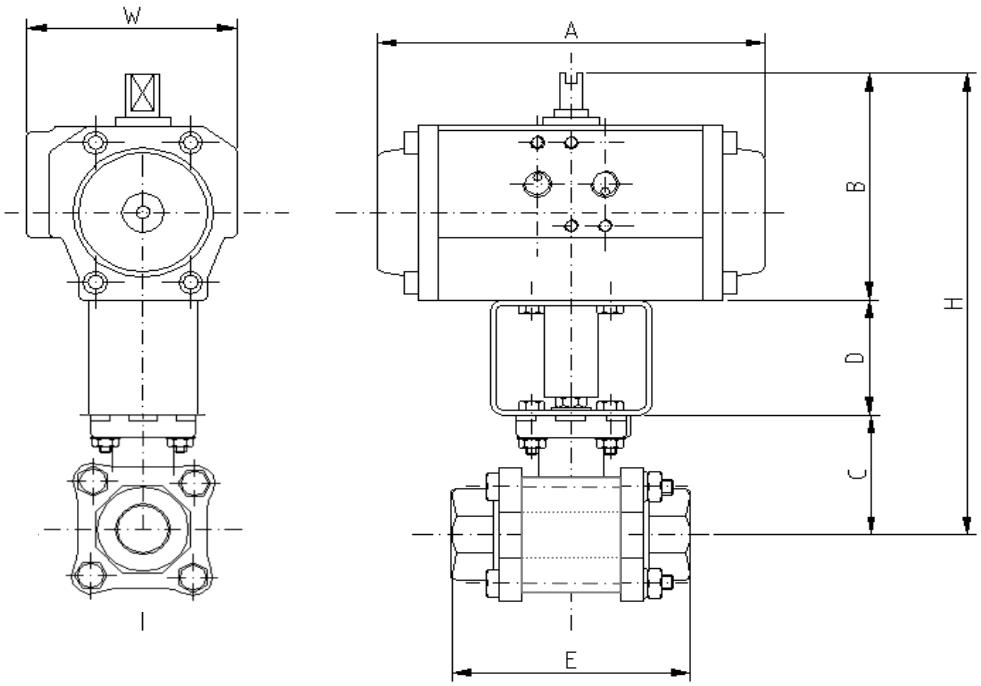

Typical Dimensions:

Double acting Mars stainless V control ball valve with pneumatic actuator mounted to the valve via a mounting kit P-2711V										
	Model	A	B	C	D	E	H	W	Kilos	Kv
1/2”	CH042	160	77	42.6	50	72.5	169	61	1.7	See chart for flows
3/4”	CH042	160	77	42.6	50	72.5	175	61	1.7	
1”	CH050	138	87	46.9	50	85.4	194	75	2.4	
11/4”	CH063	156	103	59.3	50	105.3	214	86	3.6	
11/2”	CH075	210	120	62.6	50	111.0	248	94	6.1	
2”	CH075	210	120	79.0	50	127.3	255	94	7.5	
21/2”	CH075	210	120	87.7	70	145.0	299	94	12.0	
3”	CH100	281	145	108.7	70	185.0	333	120	18.2	
4”	CH100	281	145	117.7	70	205.0	348	120	27.4	
Spring return Mars stainless V control ball valve with pneumatic actuator mounted to the valve via a mounting kit P-2712V										
1/2”	CH050SR	138	87	42.6	50	72.5	179	75	1.9	See chart for flows
3/4”	CH063SR	156	103	42.6	50	72.5	201	86	2.8	
1”	CH063SR	156	103	46.9	50	85.4	210	86	3.9	
11/4”	CH075SR	210	120	59.3	50	105.3	231	94	5.3	
11/2”	CH085SR	228	130	62.6	50	111.0	258	104	7.9	
2”	CH085SR	228	130	79.0	50	127.3	265	104	9.4	
21/2”	CH100SR	281	145	87.7	70	145.0	324	120	15.9	
3”	CH115SR	310	172	108.7	70	185.0	360	134	22.6	
4”	CH125SR	362	185	117.7	70	205.0	388	141	35.9	

Kv = m^3 per hour with a 1 bar pressure drop across the valve

CV = US gallons per hour with a 1psi pressure drop across the valve

Cv = Kv / 0.86

Assembly Dimensions

Type: 2720V Air actuator mounted to Mars stainless steel V control ball valve via stainless steel stem extension (TSM)

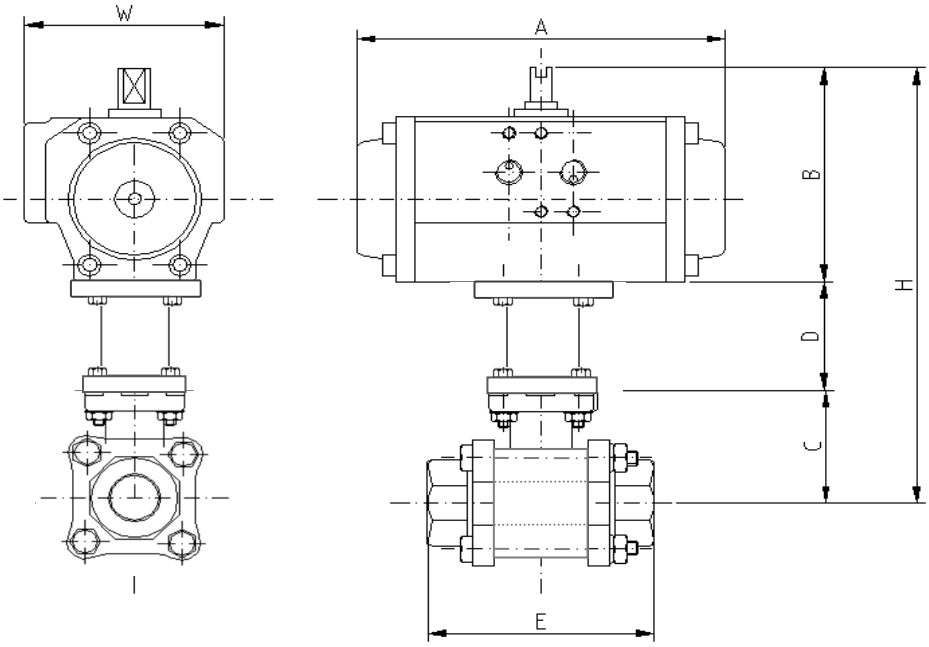

Typical Dimensions:

Double acting Mars stainless V control ball valve with pneumatic actuator mounted to the valve via a TSM P-2721V										
	Model	A	B	C	D	E	H	W	Kilos	Kv
1/2”	CH042	160	77	42.6		72.5		61		See chart for flows
3/4”	CH042	160	77	42.6		72.5		61		
1”	CH050	138	87	46.9		85.4		75		
11/4”	CH063	156	103	59.3		105.3		86		
11/2”	CH075	210	120	62.6		111.0		94		
2”	CH075	210	120	79.0		127.3		94		
21/2”	CH075	210	120	87.7		145.0		94		
3”	CH100	281	145	108.7		185.0		120		
4”	CH100	281	145	117.7		205.0		120		
Spring return Mars stainless V control ball valve with pneumatic actuator mounted to the valve via a TSM P-2722V										
1/2”	CH050SR	138	87	42.6		72.5		75		See chart for flows
3/4”	CH063SR	156	103	42.6		72.5		86		
1”	CH063SR	156	103	46.9		85.4		86		
11/4”	CH075SR	210	120	59.3		105.3		94		
11/2”	CH085SR	228	130	62.6		111.0		104		
2”	CH085SR	228	130	79.0		127.3		104		
21/2”	CH100SR	281	145	87.7		145.0		120		
3”	CH115SR	310	172	108.7		185.0		134		
4”	CH125SR	362	185	117.7		205.0		141		

Kv = m^3 per hour with a 1 bar pressure drop across the valve

CV = US gallons per hour with a 1psi pressure drop across the valve

Cv = Kv / 0.86