Motorised CEPEX EXTREME Ball Valve

AVA Electric Actuator Type: EA-3010CS

AVA Smart Electric Actuator Function Options: ON-OFF, FAILSAFE, MODULATING, FAILSAFE MODULATING, FAST ACTING

CEPEX EXTREME SERIES

AVA Electric Actuator Overview

The AVA electric actuator range is instantly recognisable with its orange and gray compact housing, and LED screen. This small sized actuator is feature rich and allows users to both operate it locally using its external push buttons, and also make some minor changes to parameters such as the final open and closed positions, and speed control.

These compact, fully weatherproof, industrial actuators offer a variety of function options covering failsafe and modulating operation, but also including a fast acting version that can turn through 90 degrees in around 1 second.

Main AVA Smart electric actuator features:

Orange and grey compact housing.

External bright OLED screen and 3 push buttons.

Fully weatherproof smart industrial actuator.

Multi-voltage capable actuator.

External electrical connections, no need to remove cover to connect.

Emergency manual override facility.

Thermostatic anti-condensation heater.

Electronic torque limiter.

End of travel switches for remote open/ closed indication.

CE marked.

Specifications:	
Actuator housing	ABS
Supply voltage range	24V AC or DC / 95-265V AC or DC
IP Rating	IP67
Actuator temp limits	-20 to +70°C
Assembly temp limits	Actuator mounted via kit +60°C*
	*Pressure rating drops as temp rises
Valve body	uPVC, cPVC, ABS, PP-H
Valve ball	uPVC, cPVC, ABS, PP-H
Valve seats/ Seals	PTFE/ EPDM (Viton option)
Valve Pressure rating	10Bar at +20C
Valve temp limits	0 to +60FC
Size range	1/2” to 3”

Applications:

Various water applications, and a wide range of corrosive chemicals subject to compatibility with wetted parts in contact with media. AVA Electric actuators are sized on a maximum differential pressure of 10bar wet service, operated at least once per day. If the intended duty differs from these parameters, or is dry (air or gas) call to check the actuator sizing as a larger output valve actuator may be required.

The maximum rated pressure only applies at +20C, and reduces dramatically as the temperature rises to the maximum of the particular material being used (see page 5).

Ball valve information:

High quality double union thermoplastic ball valves available in a variety of materials, all with blow-out proof ball and stem. With both valve and electric actuator designed and manufactured in Europe, the motorised Cepex Extreme ball valve offers excellent performance over a wide range of applications.

Turning the ball through 90° fully opens the valve, turning back through 90° fully closes the valve and isolates the flow.

Typical KV Values

Valve Size	1/2”	3/4”	1”	11/4”	11/2”	2”	21/2”	3”	4”
CV	7.14	18.21	31.58	113.94	203.22	243.35	291.81	441.18	476.19

CV = US gallons per hour with a 1psi pressure drop across the valve . Kv = Cv x 0.86

AVA ON OFF ELECTRIC ACTUATOR

Power open, power close, stays put on loss of external power.

How this electric 1/4 turn valve works (on-off):

Electrically operated valves are driven by a motor and gearbox. On receipt of a continuous voltage signal the motor runs and, via a gearbox in the AVA smart electric actuator, rotates the valve stem. The motor stops at the desired position (usually 0° or 90°) by software using angular set points monitored by digital magnetic position sensing. The smart valve actuator remains in this position, with the voltage still applied continuously, until switched and a continuous voltage reversing signal is applied, which runs the motor in the opposite direction, reversing the rotation until the software.

Function Options:

Failsafe AVA Actuator

AVA Electric actuators fail to a pre-set position using internal capacitors in the Model 20, or Li-ion batteries in the Models 60-110. The failsafe system works by either charging the capacitor or internal battery to provide an alternate power source that is capable of driving the AVA actuator to the desired fail position should external power be lost. On loss of external power the AVA will draw on the stored energy to send the actuator to the desired position, if not already in that position.

Modulating AVA Actuator

Movement of the J3CS actuator is proportional to an input control signal, typically 4-20mA or 0-10V, with a factory fitted digital positioner that uses magnetic position sensing of the actuator's output shaft position.

The modulating system works by comparing the physical position of the AVA actuator's output shaft proportionally to an input control signal. For example, using 4-20mA control where 4mA is closed, and 20mA is open, if a 12mA signal is applied, the output shaft should sit at 50% open. If the digital magnetic position sensor feed back an position other than or 50% open the positioner will drive it in the direction required to cancel the difference (error). When the error is eliminate the AVA actuator will stop. The positioner constantly checks the shaft position relative to the input signal.

There are options for how the AVA modulating reacts to loss of the control signal, but it will stay put on loss of external power.

Configuration options:

1) Closes on loss of control signal
2) Opens on loss of control signal
3) Stays put on loss of control signal

Failsafe Modulating AVA Actuator

Failsafe modulating by providing the digital positioner and failsafe system, operates functionally as a modulating electric actuator as described above, but will fail as per the AVA's setting on loss of external power, as follows:

Configuration options:

1) Closes on loss of control signal, or on loss of external power
2) Opens on loss of control signal, or on loss of external power
3) Stays put on loss of control signal

WIRING DIAGRAMS

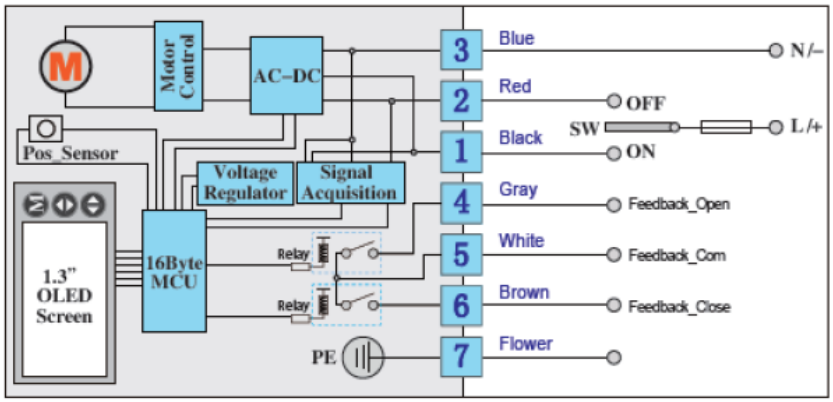

ON-OFF & FAILSAFE

SPDT RELAY TO SWITCH HOT BETWEEN OPEN AND CLOSED POSITIONS.

STANDARD WIRING.

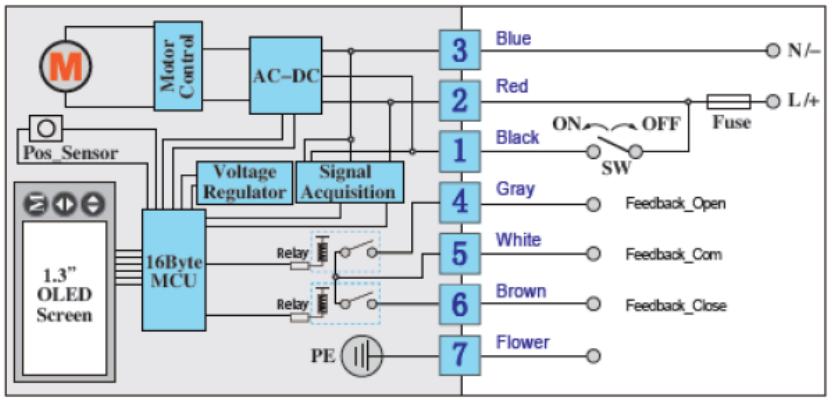

ON-OFF & FAILSAFE

SPST SWITCH MAKES OR BREAKS HOT TO OPEN AND CLOSE.

OPTIONAL WIRING.

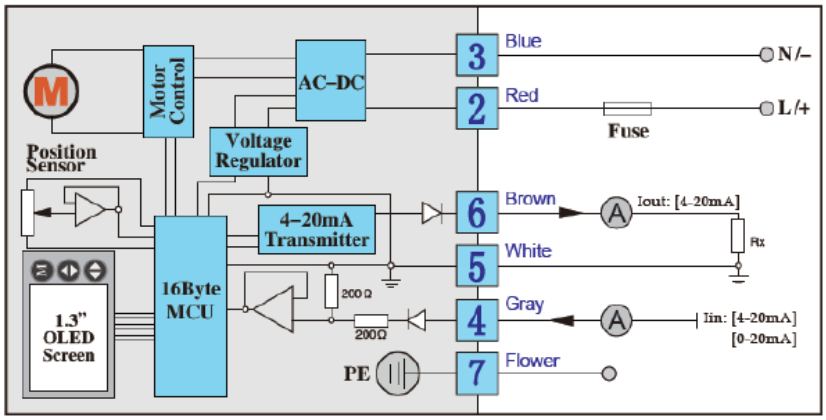

MODULATING

PERMANENT LIVE, MOVEMENT CONTROLLED BY INPUT SIGNAL

STANDARD WIRING.

Motorised CEPEX EXTREME Ball Valve

AVA Electric Actuator Type: EA-3010CS

AVA Smart Electric Actuator Function Options: ON-OFF, FAILSAFE, MODULATING, FAILSAFE MODULATING, FAST ACTING

CEPEX EXTREME SERIES

TECHNICAL FEATURES AND RANGE

Sizes:
D16 (DN10) > D110 (DN100)

Nominal pressure:

PVC-U | CPVC | PVDF
240 psi / 73ºF (PN16 / 20ºC) - DN10 - DN50
PVC-U | CPVC | PVDF
150 psi / 73ºF (PN10 / 20ºC) - DN65 - DN100
PP-H | ABS
150 psi / 73ºF (PN10 / 20ºC)- DN10 - DN100

Standards:
ISO/DIN, ANSI/ASTM, British Standard, JIS

Body material:
PVC-U, PVC-C, PP-H, PVDF, ABS

Rubber seal material:
EPDM/ *Food grade EPDM* FPM

Pressure vs. Temperature Chart

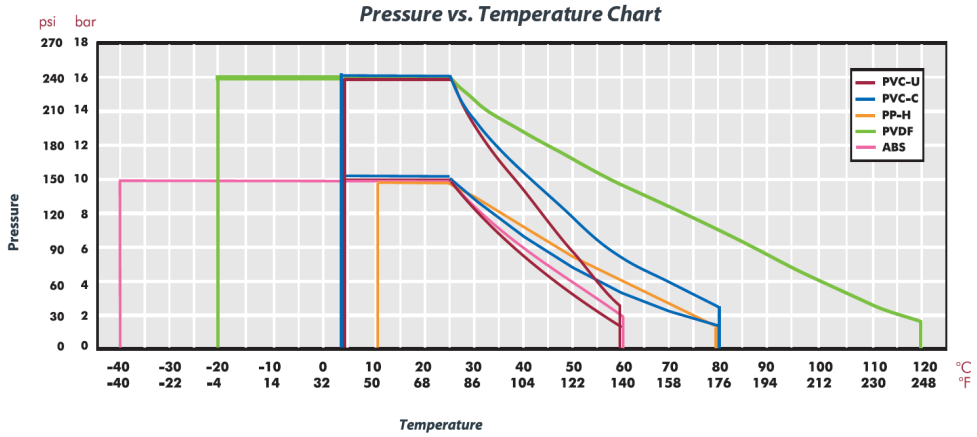

EXPLODED VIEW

	Description	Material
1	*Shaft*	PVC-U/PPH/CPVC/PVDF/ABS
2	*Ball*	PVC-U/PPH/CPVC/PVDF/ABS
3	*Nut*	PVC-U/PPH/CPVC/PVDF/ABS
4	*Handle*	PP + GF
5	*End connector*	PVC-U/PPH/CPVC/PVDF/ABS *
6	*Dampener seal*	Food grade EPDM / FPM
7	*Shaft o-ring*	Food grade EPDM / FPM
8	End connector *o-ring*	Food grade EPDM / FPM
9	*Ball seat*	PTFE
10	*Body o-ring*	Food grade EPDM / FPM
11	*Body*	PVC-U/PPH/CPVC/PVDF/ABS
12	*Seal-carrier*	PVC-U/PPH/CPVC/PVDF/ABS
13	*O-ring*	EPDM / FPM
14	*Fixing inserts*	Stainless steel

More features:

- *Laser marking*
- *100 % traceability: serial and bach number*
- *100 % valves tested in water pressure test bench with water at high pressure and low pressure with air*

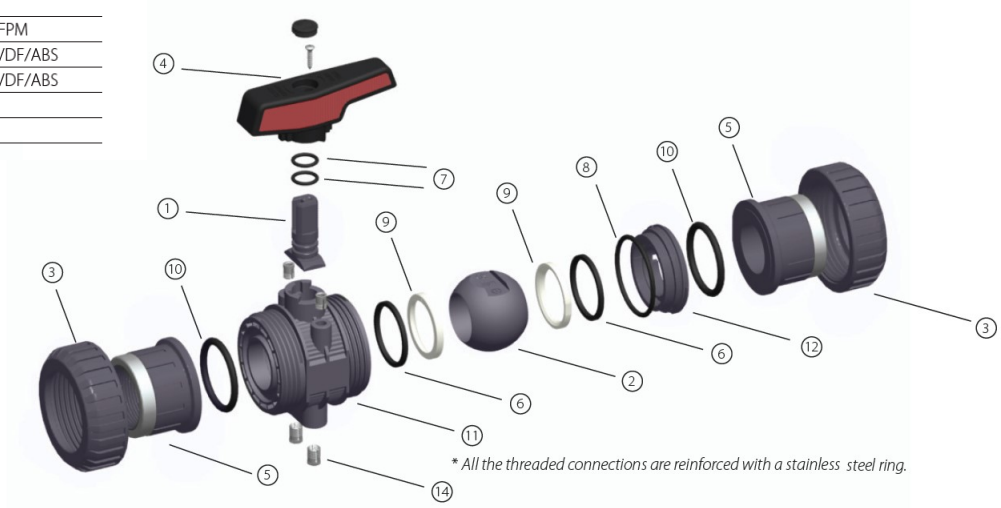

** All the threaded connections are reinforced with a stainless steel ring.*

Motorised CEPEX EXTREME Ball Valve

AVA Electric Actuator Type: EA-3010CS

AVA Smart Electric Actuator Function Options: ON-OFF, FAILSAFE, MODULATING, FAILSAFE MODULATING, FAST ACTING

Valve Material Options:

uPVC

Unplasticized Polyvinyl Chlroride

Pressure/ Temperature rating: 240psi at +68F reducing to 45psi at +140F

Strengths: Good chemical resistance, mechanical strength, resistance to ageing and good thermal resistance.

Main uses: Foodstuffs, potable water, demineralized water, unconditioned water, most acids and alkalis, paraffin, saline solutions.

cPVC

Chlorinated Polyvinyl Chlroride

Pressure/ Temperature rating: 240psi at +32F reducing to 45psi at +176F

Strengths: Good chemical resistance, mechanical strength, resistance to ageing and good thermal resistance Also resistant to fire.

Main uses: Strong inorganic acids, saline and alkali solutions and paraffin hydrocarbons. Suitable for conveying hot water in solar panel installations.

PP-H

Polypropylene Homopolymer

Pressure/ Temperature rating: 240psi at +32F reducing to 45psi at +176F

Strengths: Excellent chemical resistance, resistance to ageing and good thermal stability.

Main uses: Foodstuffs, potable water, demineralized water, unconditioned water, spa water, halogens, alkaline solutions and detergents.

ABS

Acrylonitrile Butadiene Styrene

Pressure/ Temperature rating: 16Bar at +20C reducing to 3Bar at +70C

Strengths: Excellent chemical resistance, resistance to ageing and good thermal stability. At low temperatures.

Main uses: Foodstuffs, potable water, chilled water, boosted cold water, low temperature cooling, Demineral ised water, Waste water, Vacuum systems

Motorised CEPEX EXTREME Ball Valve

AVA Electric Actuator Type: EA-3010CS

AVA Smart Electric Actuator Function Options: ON-OFF, FAILSAFE, MODULATING, FAILSAFE MODULATING, FAST ACTING

Dimensions (mm) - Motorized with AVA Actuator:

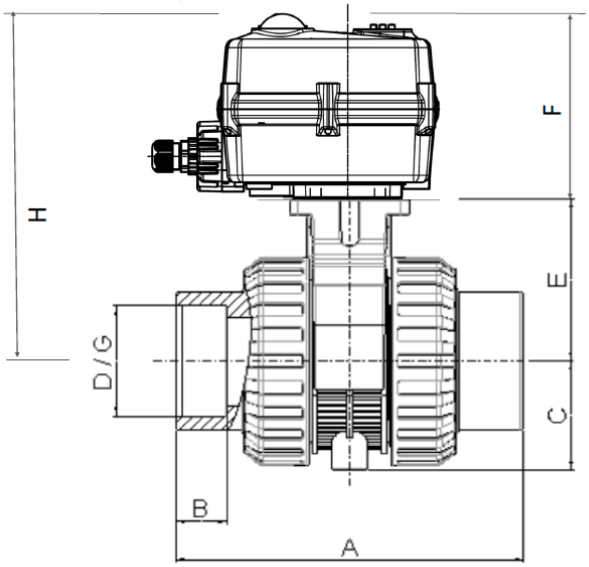

Actuator models and assembly dimensions (mm):

Valve DN	AVA Model	A	A'	E	F	H	Wide
10	20	102	101	63	90	153	70
15	20	102	101	63	90	153	70
20	20	120	118	62	90	152	70
25	20	139	136	76	90	166	70
32	20	156	151	73	90	163	70
40	20	170	165	91	90	181	70
50	20	197	190	93	90	183	70
65	60	238	235	122	122	244	115
80	60	278	270	132	122	254	115

Valve break out torque (Bare, no safety)

	DN15	DN20	DN25	DN32	DN40	DN50	DN65	DN80
Nm	1	2	3.5	3.5	5	15	25	45
Lb.ins	8.9	17.7	31	31	44.3	132.8	221.3	398.3

Valve and actuator bracket dimensions (mm)

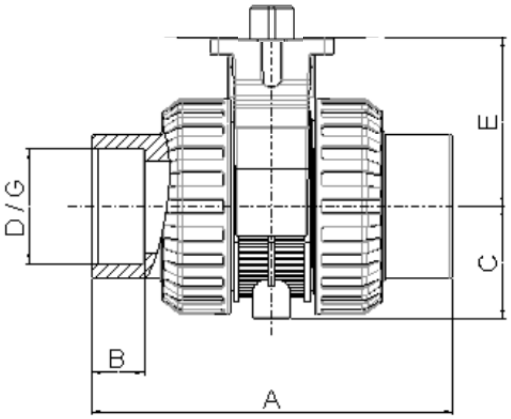

DN	D/G	A±2 uPVC, cPVC,	A'±2 PP, PVDF	B	B'	C	E
10	16 / 3/8"	102	101	15.5		26	63
15	20 / 1/2"	102	101	17.0		26	63
20	25 / 3/4"	120	118	20.0		31.5	62
25	32 / 1"	139	136	23.0		36	76
32	40 / 11/4"	156	151	27.5		45	73
40	50 / 11/2"	170	165	32.0		51	91
50	63 / 2"	197	190	39.0		61	93
65	75 / 21/2"	238	235	45.0	32	75	122
80	90 / 3"	278	270	53.0	37	88.5	132